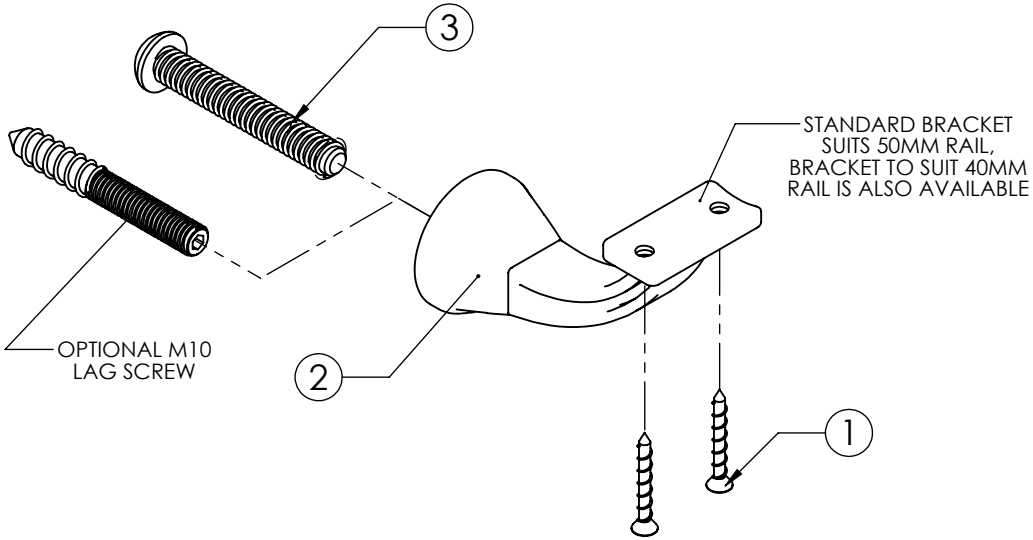

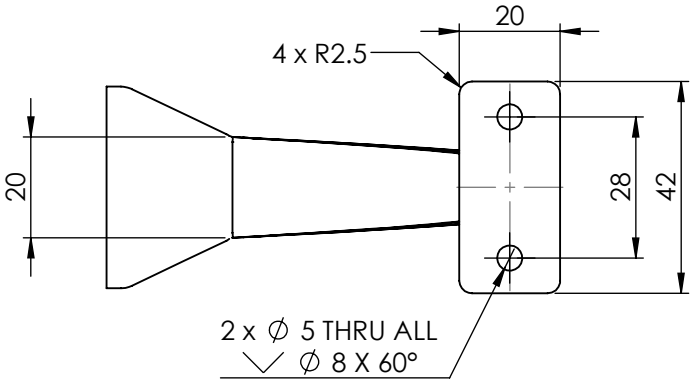

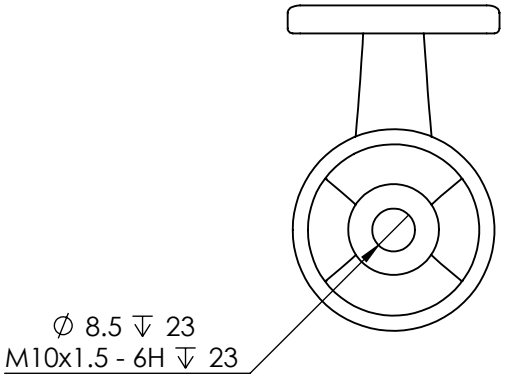

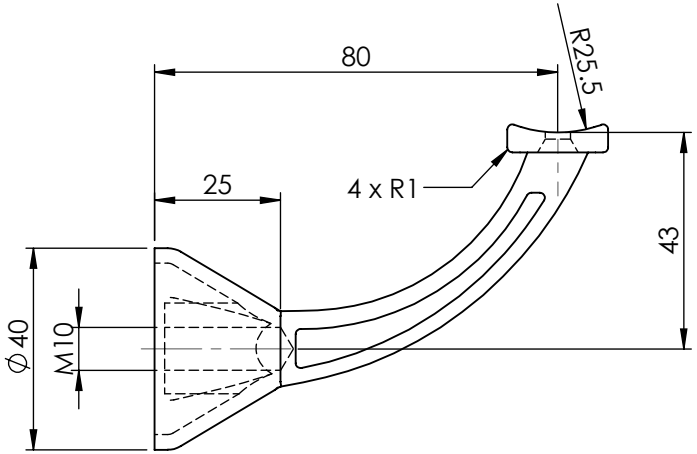

ITEM NO.	PART NUMBER	DESCRIPTION	QTY.
1	SCS-3.5-31	SCREW-C/SUNK-3.5MMX31MM	2
2	4462-1	STAIR RAIL BRACKET	1
3	B-DH-M10-65	BOLT-DOME HEAD-M10X65MM	1

DRAWN	B DOOLAN	17/06/2015
CHK'D	U WAUGE	17/06/2015
MATERIAL	ZINC ALLOY	
FINISH	CHROME/BRONZE/GOLD/SATIN/WHITE	
	MATT BLACK / GLOSS BLACK / RAW	

EMRO WARE™

www.emro.com.au

This drawing has been made with due care and attention however Emro do not accept any responsibility for variations. This drawing and information contained is the property of Emro and cannot be used without their consent.

CAT NO: 4462

REV: A

DESCRIPTION: ARCHITECTURAL CONCEALED BRACKET-COMPLIES WITH AUSTRALIAN STANDARD AS1428.1-2009